HSS 130

Order Example (주문예)

HSS130	400R	B300	D:4	5980L	3SETS
Type	Radius	Width	Divider	Length	Q'ty

Chain, Guide Rail

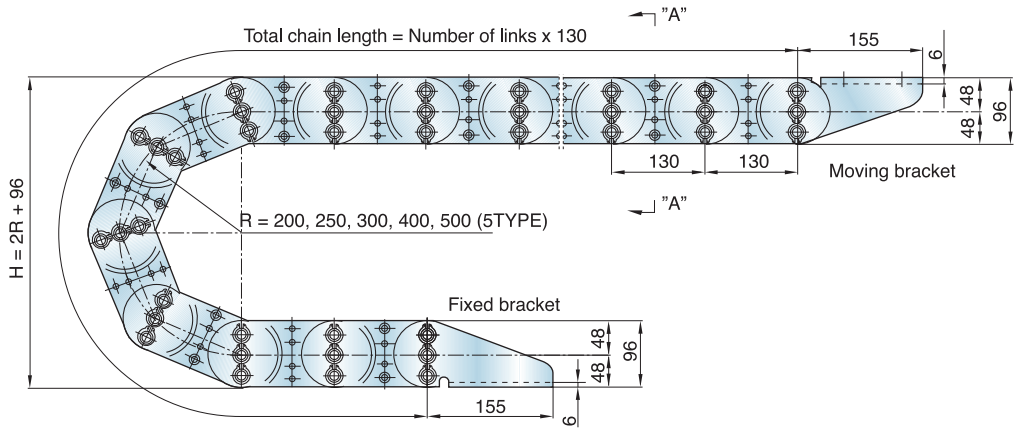

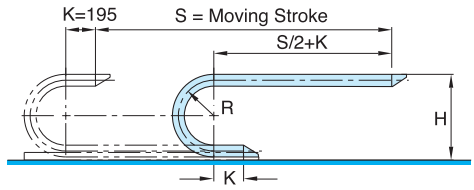

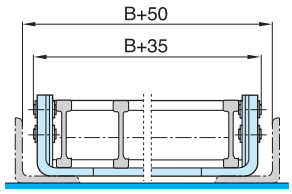

Guide Rail

· Length $L = \frac{S}{2} + \pi R + 390$

· Radius
· Height

R	200	250	300	400	500
H	496	596	696	896	1096

Divider

Cable/Hose	dmax	ø50				
Frame Dim	"B"	200	250	300	350	400
Divider	Min.No	2	3	4	5	6
	Max.No	3	5	8	9	10

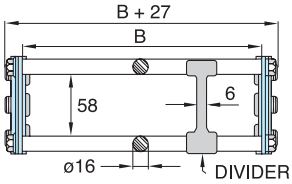

A-A Cross Section

Brackets

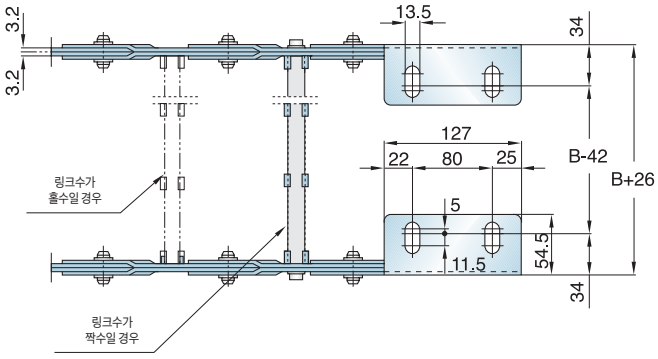

Fixed Bracket

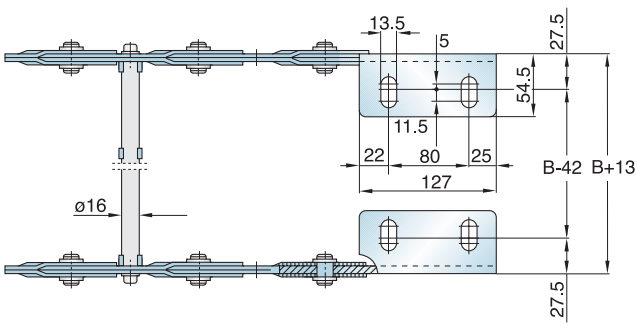

Moving Bracket